DAIKIN

KER303A

1× 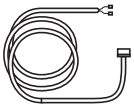

1× 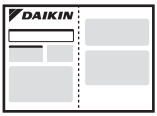

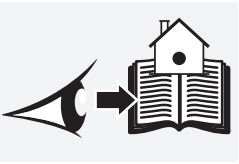

1

6× PH2

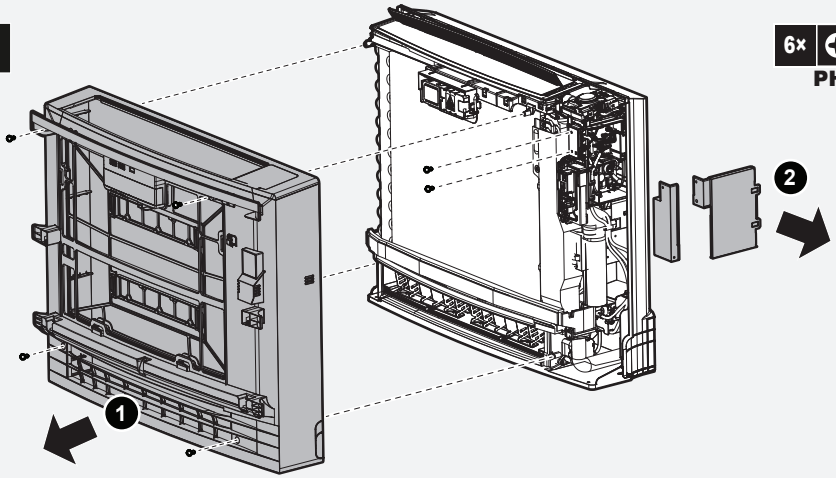

2

Copyright 2026 Daikin