DAIKIN

KER303A

1× 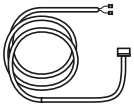

1× 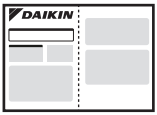



1

5× PH2

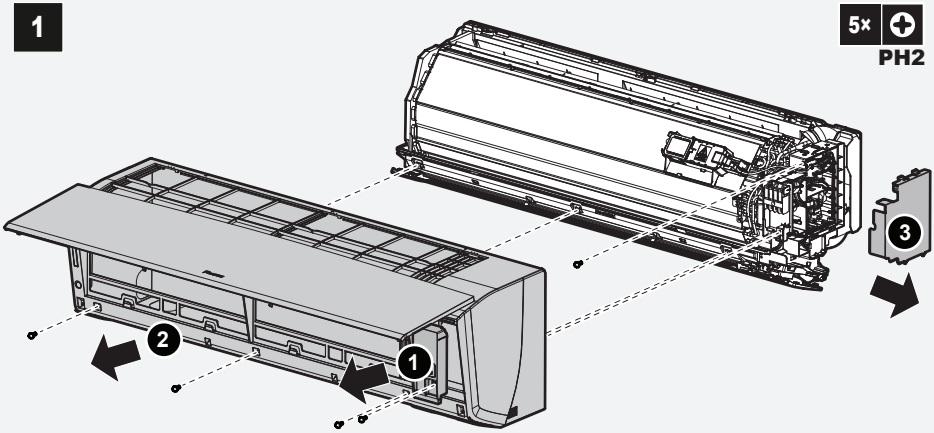

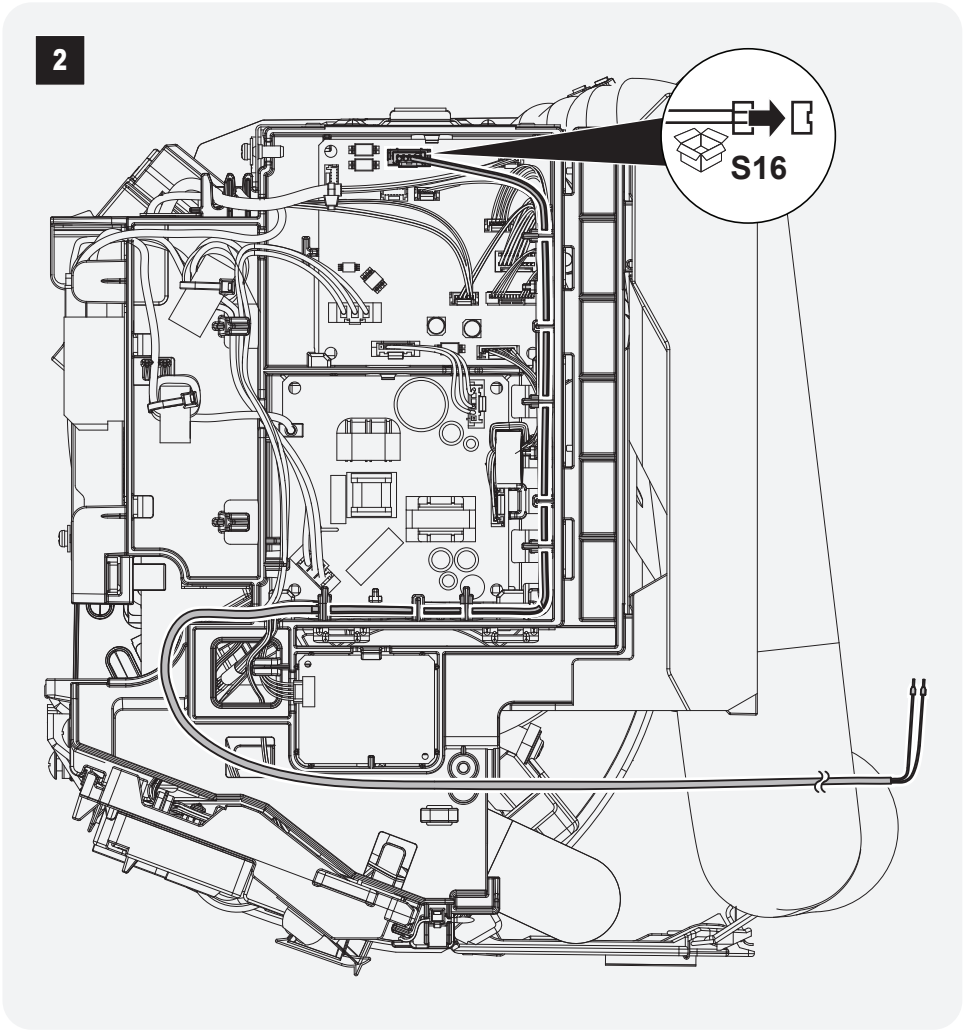

Copyright 2026 Daikin