KER303A

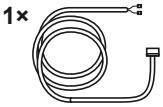



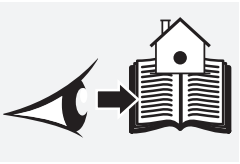

1

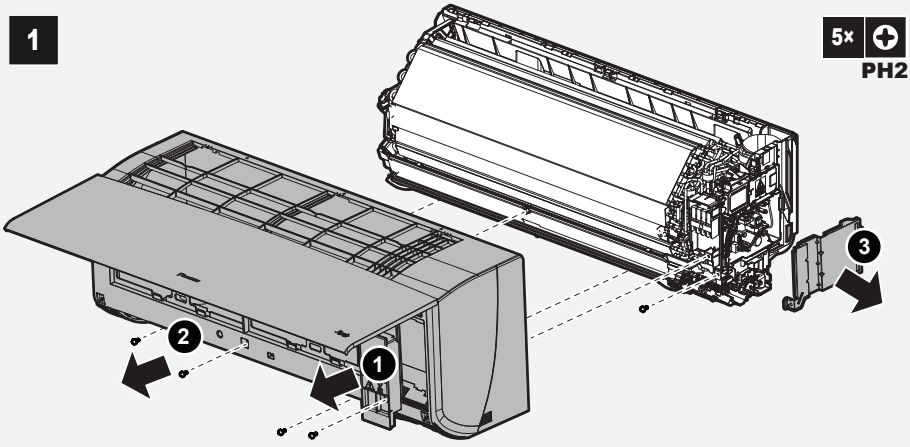

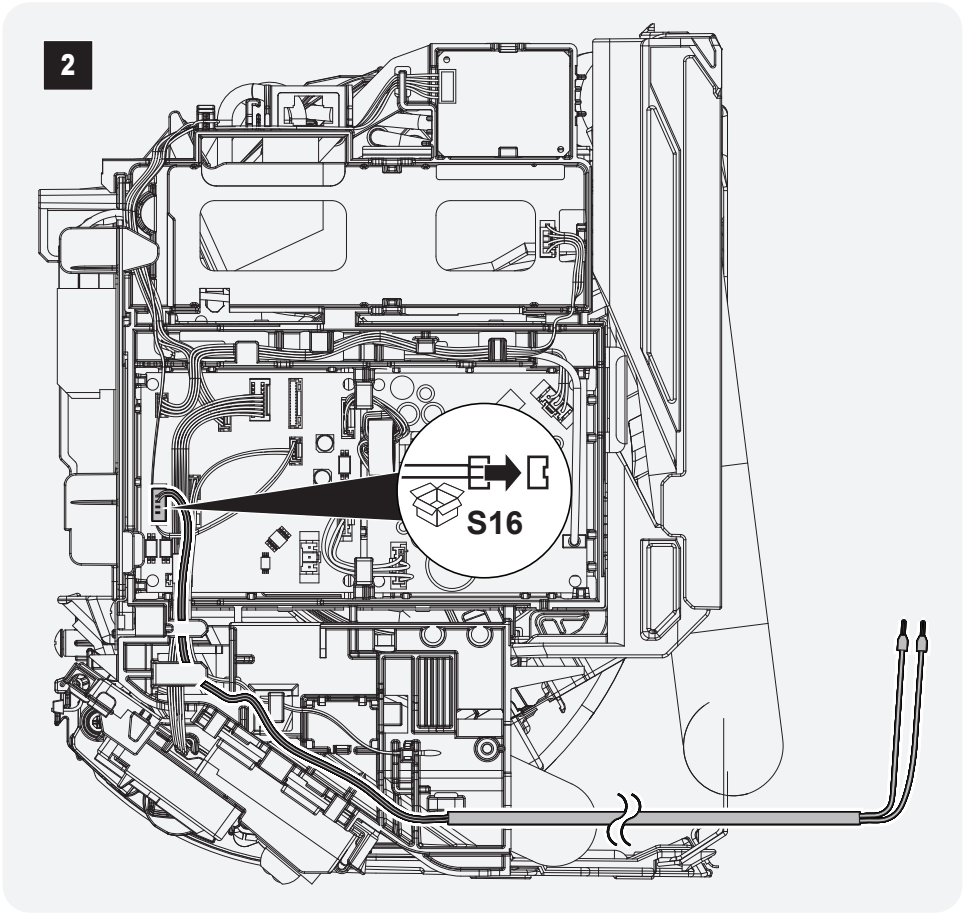

Copyright 2026 Daikin